REV	DESCRIPTION	MARK
X1	first edition	

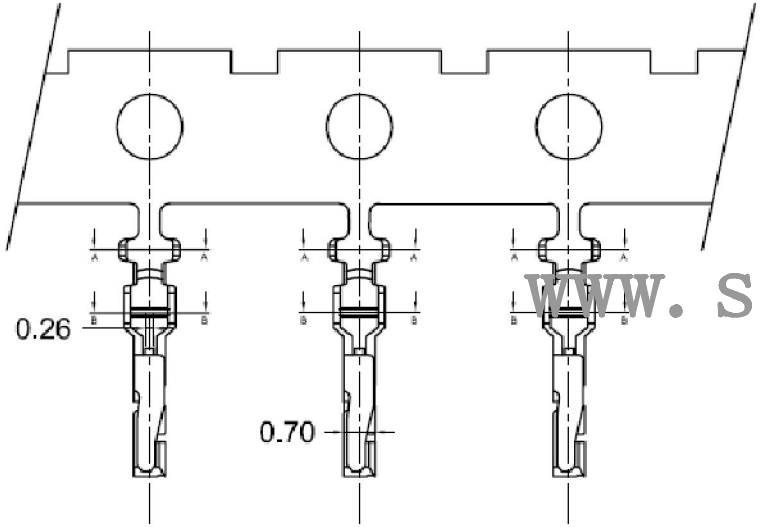

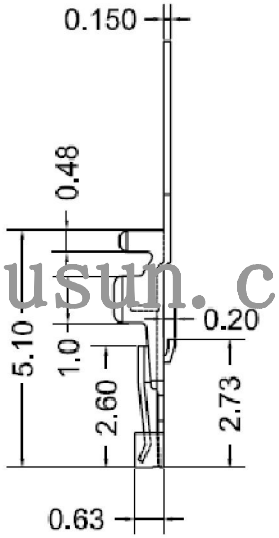

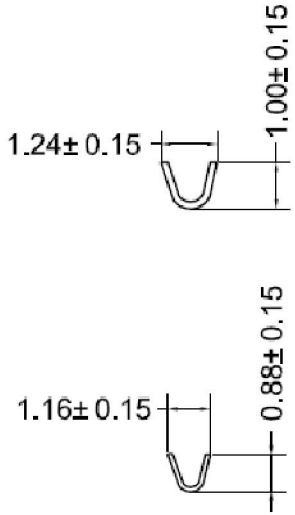

www.szjusun.cn

SPECIFICATIONS
Current rating: 1A AC, DC
Voltage rating: 50V AC,DC
Temperature range: -25° C ~ +85° C
Insulation resistance: 500MΩ/ min.
Withstanding voltage: 500V AC/ minute.
Contact resistance: 20mΩ/ max.

Part No.	Wire Range	Insulation O.D.	Material	Finish
	AWG#28-#32	0.60mm(max)	Phosphor Bronze	Gold-flash 1u"-3u"
Qty/reel				
15,000PCS				

JUSUN 钜赛实业(深圳)有限公司 JUSAI INDUSTRIAL (SHENZHEN) CO.,LTD				PART NO.: DF19-TER	
X. ± 0.50	X° ± -	MAT'L	APPD:	CUS PART NO.:	
.X ± 0.30	.X° ± 0.1°				
.XX ± 0.10	.XX° ± 0.05°	FINISH	CHKD:	DATE 2017.04.23	VERSION V1.0
.XXX ±	.XXX° ±				
	UNITS: mm	Q'TY	DR:	SCALE 1:1 / SHEET 1/1	REV. X1