REV.	ECN NO.	LOCAS.	DESCRIPTION	DATE	DESIGN
A0					HANG

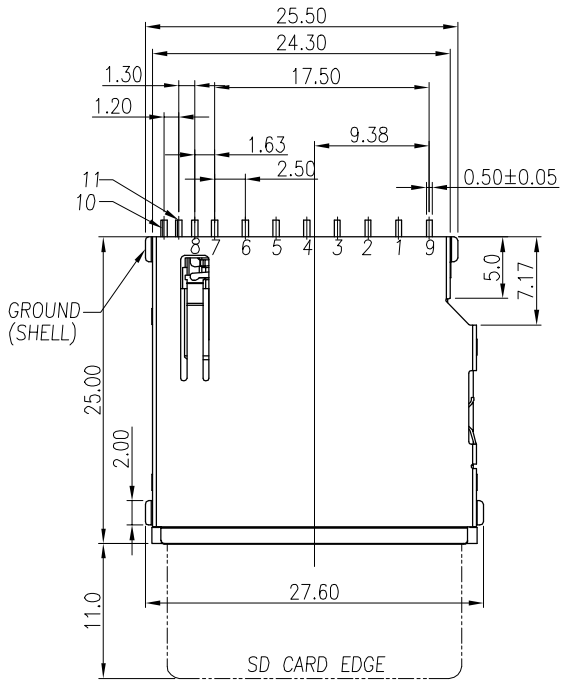

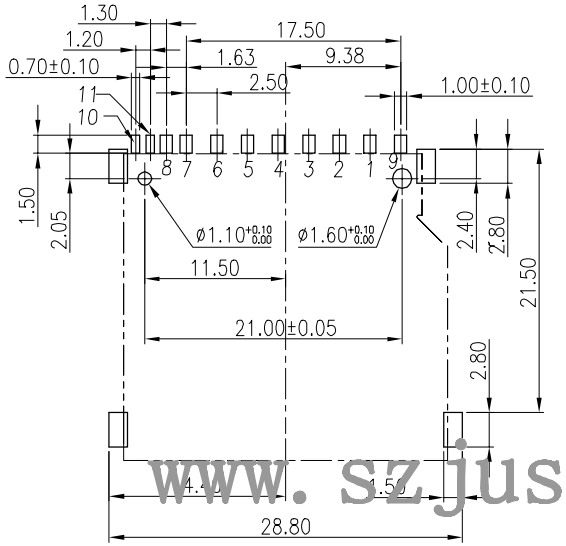

P.C.B Layout

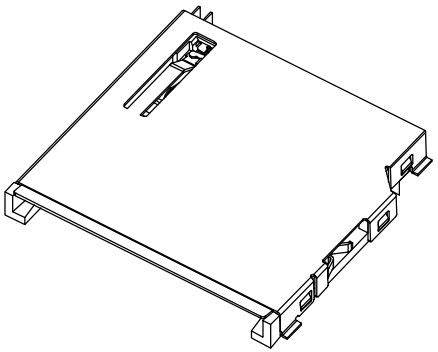

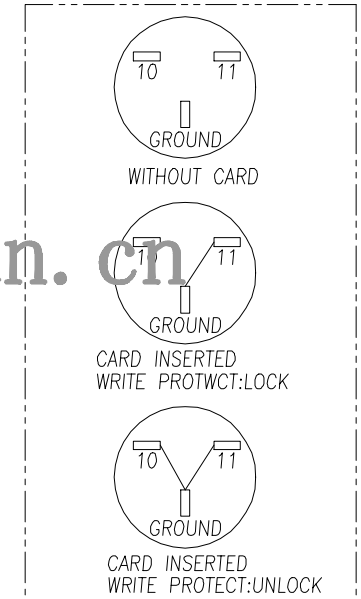

SD CARD PIN DESIGN

Pin No.	Name	Description
1#	CD/DAT3	Card detect/Data I/O
2#	CMD	Command
3#	VSS1	Ground
4#	VDD	Power
5#	CLK	Clock
6#	VSS2	Ground
7#	DAT0	Data I/O
8#	DAT1	Data I/O
9#	DAT2	Data I/O

NOTES:
1.MATERIAL
HOUSING: HIGH TEMPERATURE THERMOPLASTIC.
CONTACT: COPPER ALLOY.
SHELL: COPPER ALLOY.
2.PLATING
CONTACT AREA: GOLD PLATED OVER Ni.
SOLDER TAIL: 100 u" MIN Sn PLATED OVER Ni.
SPEC SEE ORDERING INFORMATION
SHELL SOLDER AREA: GOLD PLATED OVER Ni.
3.RATING
CURRENT RATING: 0.5A
VOLTAGE RATING: 250VRM
OPERATING TEMPERATURE:-25°C~90°C
4.SPECIFICATION
CONTACT RESISTANCE: 100mΩMax
DIELECTRIC WITHSTANDING VOLTAGE: 500VAC
INSULATION RESISTANCE: 100 MΩMin
INSERTION FORCE: 40N MAX.
SEPARATION FORCE: 2N MIN.

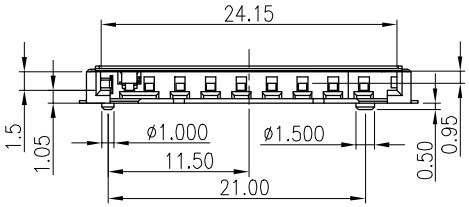

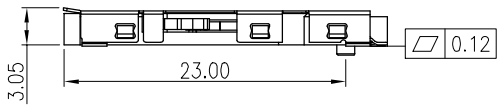

www.szjusun.cn

JUSUN 钜赛实业(深圳)有限公司
JUSAI INDUSTRIAL (SHENZHEN) CO.,LTD

DRAW NO.	050-00C-09	DATE	DRAW NAME: SD Card Connector Long Type	
DESIGN	HANG	070505	P/N NO. SD-050-00C-09	FILE:
CHECK	WANGCM	070506	UNIT: mm / SHEET: N/A	MODEL:
APPROVED	HUYX	070506		REV. A0 / SCALE N/A